SAF™ Technology Design Guide

Accuracy Compensation 2
- Scaling Factors 2
- Maximum Part Size 2
- Scaling Factors Summary 2
- Border Shaving 3
- Fine Feature Resolution 4
- Sharp Edges and Delicate Features 5
- Border Shaving Summary 6

Nesting 6
- Nesting Density 6
- Minimum Model Spacing 7
- Mechanical Properties - Orientation 7
- Aesthetics – Orientation 8
- Depowdering Features 9
- Clearances and Fits 11
- Printing Parts to Assemble After Printing 12
- Labels and Text 12
- Embossed or Debossed 12
- Pixel Stepping 13

Design for SAF 14
- More Complex, More Efficient 14
- Powder Removal 14
- Threads and Inserts 15
- Texturing 15
- Design for Part Properties 16
- Design for Nesting 17
- Small Part Management 18

stratasys

Accuracy Compensation

Scaling Factors

When polymers are hot, they expand, when they cool, they contract. When parts are printed and fused, they are in their hot, expanded state, from which they will cool and contract. To compensate for this, the parts need to be scaled up before they are printed to allow them to cool back to their nominal size.

This is achieved using scaling factors which are applied during slicing. The factors will scale the parts up in the X, Y and Z directions. These scaling factors can be tuned using calibration builds.

When using GrabCAD Print Pro™, the scaling factors can be entered into the H350™ online in Configuration > Buildfile tuning > Default Shrinkage Compensation Factors. When using other build preparation software, the scaling factors will need to be entered into the build processor directly.

Maximum Part Size

As all parts will be scaled up during slicing, this needs to be considered when talking about the maximum part size (or maximum effective build volume).

Using the scaling factors, the build envelope can be scaled down to give the maximum effective build volume. Any part which fits within this volume will be printable. When using GrabCAD Print Pro, this will be automatically calculated and displayed within the software.

Scaling Factors Summary

- During slicing parts are scaled up in X, Y and Z to compensate for shrinkage
- This can be calibrated per machine
- Due to scaling, the maximum part size/effective build volume is slightly smaller than the total printable area

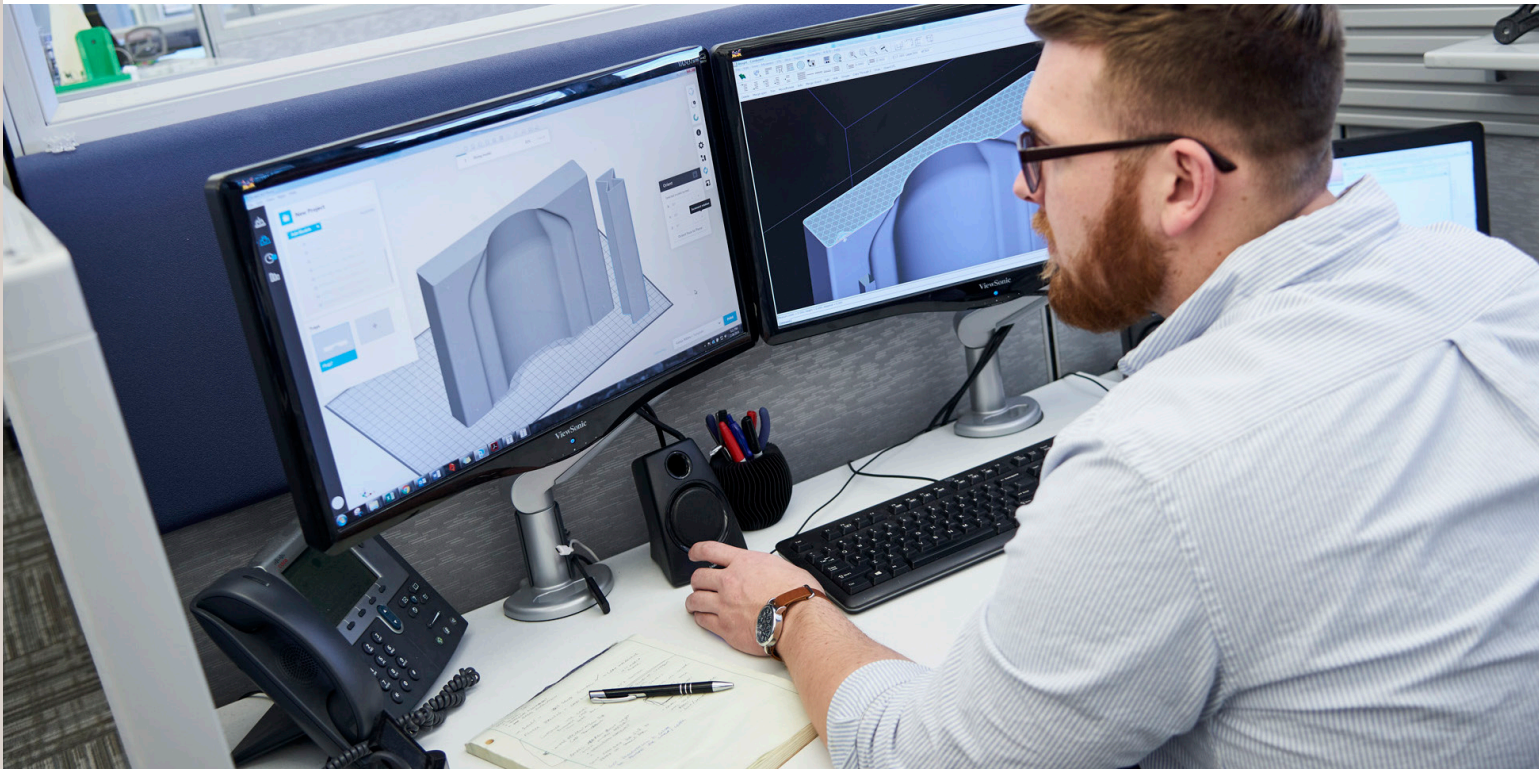

Border Shaving

During fusion, the printed area exceeds the melt temperature of the material. There will always be some thermal gradient between the printed and non-printed areas. This results in a very small amount of extra material being heated sufficiently to fuse onto the part walls, this is referred to as wall growth, illustrated in Figure 1.

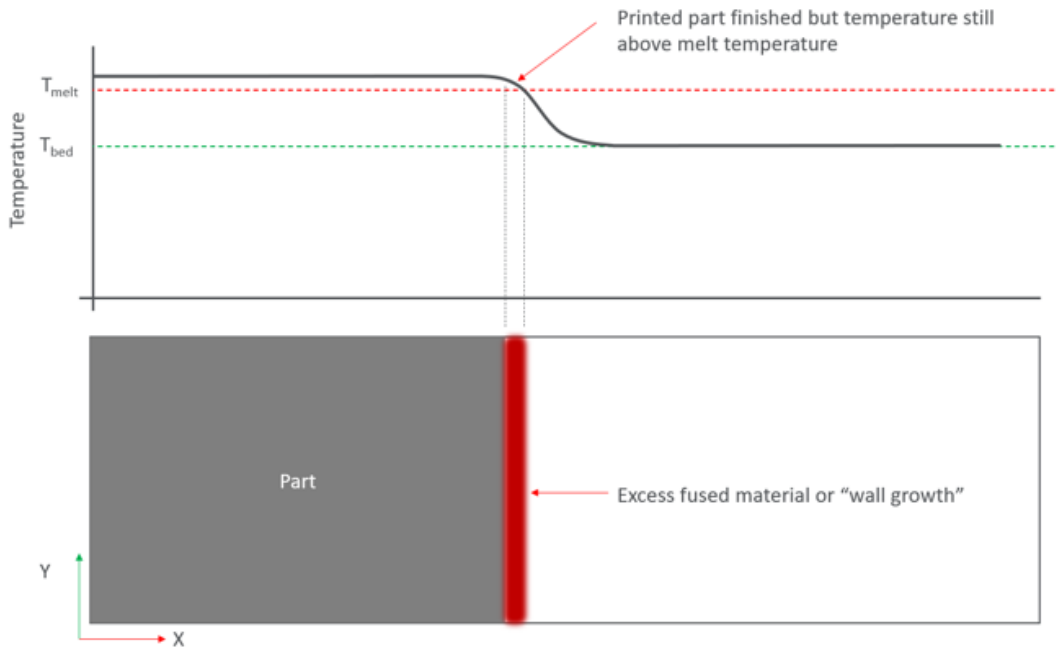

Figure 1

The result of wall growth is that all part dimensions in the XY plane grow by a fixed amount. To compensate for this, a process called border shaving is applied to the build slices where a small number of pixels around the edge of all parts are deleted. The process is illustrated in Figure 2.

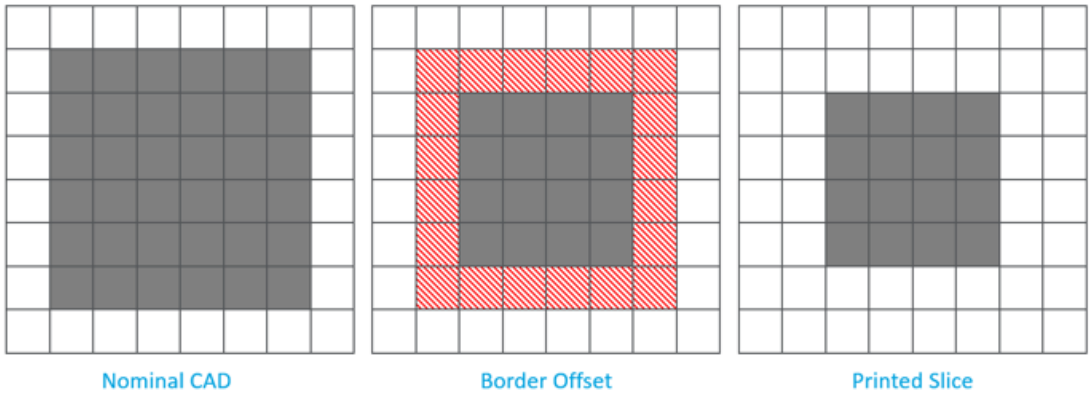

Figure 2

This border shaving allows for wall growth and ensures that the finished part is accurate to the nominal CAD data, as shown in Figure 3.

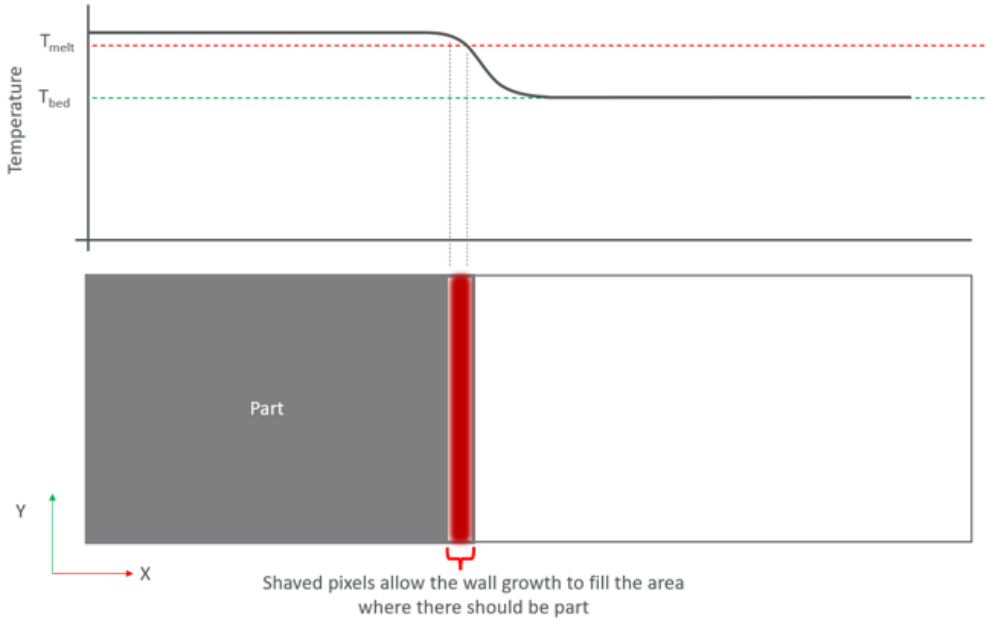

Figure 3

When using GrabCAD Print Pro, the border shaving value can be entered into the H350 online in Configuration > Buildfile tuning > Border Shaving. When using other build preparation software, the border shaving value will need to be entered into the build processor directly. Note that the values used for GrabCAD Print Pro and other software will differ slightly due to implementation. When entered into the H350 online, the “Magics Equivalent” will be displayed for reference, this value should be used in the Magics build processor.

Fine Feature Resolution

Understanding the need for, and implementation of, border shaving it’s important to understand the fine feature resolution of the H350. When a fine feature is present in the XY plane there is a risk that the application of border shaving will delete the feature completely or at least lead to under sizing of the feature. This is illustrated in Figure 4.

Where fine features are required, better results are obtained by printing with the thin dimension in Z. A minimum feature size of 0.5mm is recommended, although advanced users with an understanding of border shaving may be able to achieve less than this.

Recommended minimum feature size	0.5mm

Border offset should be considered when printing any thin feature or fine detail, examples are:

- Fins
- Living hinges
- Labels and text

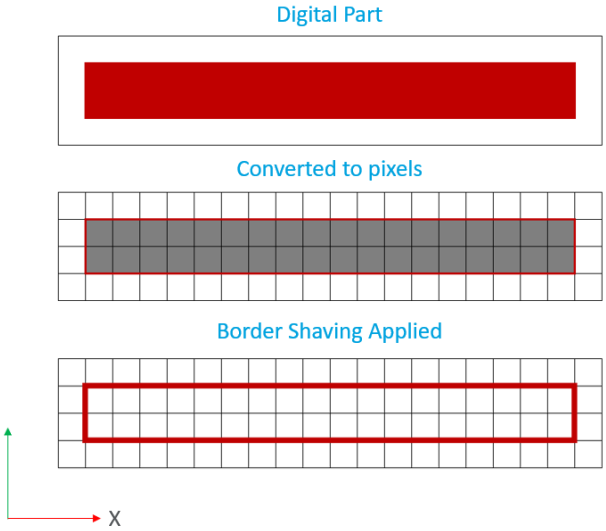

Figure 4

Sharp Edges and Delicate Features

Fine features can be delicate and easily broken during depowdering. This is very obvious for thin upstands or labels; however it also affects sharp corners and edges. The tip of a sharp edge is a very fine feature. As shown below, Figure 5, these can be damaged easily during depowdering. If the design allows, it is preferable to add a radius to these edges to remove the sharp edge and add extra strength.

Sharp edge which has been damaged during depowdering

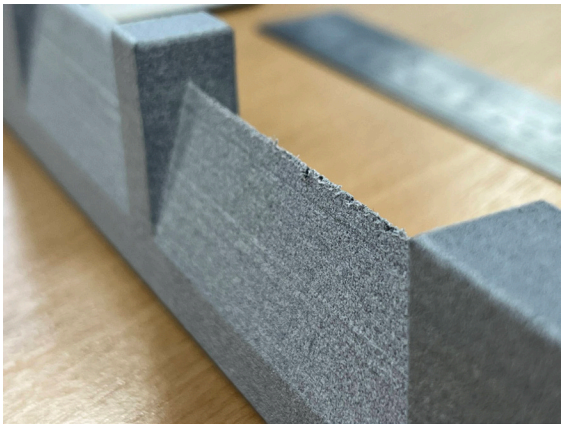

Radius applied to the edge, more robust

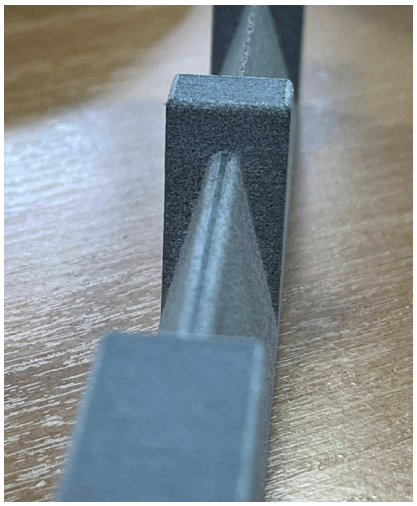

Figure 5

The same effect can also be observed on square edges of up facing material. The slight meniscus lip around the edge can become damaged and look untidy, Figure 6. Adding a very small radius (1mm) to these square edges can mitigate the lipping and reduce damage during depowdering. This approach avoids having to reorient the part in the nest which could compromise aesthetics.

Square edges of upfacing material; meniscus lip is damaged

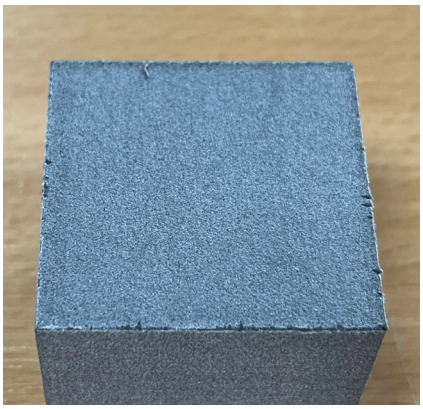

1mm radius applied to edges makes them much more robust

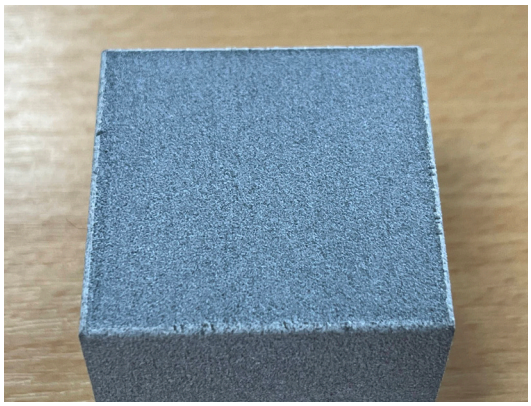

Figure 6

Border Shaving Summary

- Border shaving deletes pixels around the edge of parts in each slice to improve accuracy
- Border shaving only occurs in the XY plane, not in Z
- Be aware that very thin features in the XY plane can be made smaller/deleted completely when shaving is applied
- 0.5mm is the minimum feature size
- Thin dimensions should be in the Z direction

Nesting

Nesting Density

Nesting refers to arranging parts inside the 3D space of the build chamber. Decisions made at this stage can have a significant influence on the part quality. The same part, from the same machine, could be sold or scrapped solely depending on the choices made during nesting.

Nesting density is a measure of how packed the build is. It is the percentage of the build volume which is taken up by parts. Higher nesting densities are more productive and reduce part cost (per cm^3).

The primary issue caused by printing very high nesting density builds is degradation of the powder. Very high nesting densities cause a thermal aging of the powder. This affects its colour, flowability, and the mechanical properties of the printed parts.

Nesting density – refresh ratio trade-off

Higher nesting density builds convert more powder into parts, meaning less recycled powder is recovered. An average nesting density of 12% is recommended to allow for steady state operation with 70:30 refresh ratio. If printing at consistently higher nesting densities, it will be necessary to add a greater proportion of virgin powder to continue operation. This higher use of virgin material is offset by the increase in volume of parts which are produced per build.

A rough guide for nesting densities with SAF is given below. The upper limit of nesting density is usually governed by the geometry of parts. It is uncommon to find real parts which nest higher than ~30%.

- 12% - Recommended – No problems
- 20–30% - Should print comfortably with no powder degradation
- 30–40% - Should print well, powder is likely to discolour (High Yield PA11 particularly)
- 40–50% - Likely to print successfully, powder should be disposed of. Real parts are unlikely to reach this density

Minimum Model Spacing

The closer parts can be nested together, the more parts can fit into a build. This improves the productivity of the machine and lowers part cost, however, it's important not to go too close as parts can fuse together or make depowdering difficult.

Minimum model spacing will depend on the part geometry - large, chunky parts are referred to as having a lot of "thermal mass". They will absorb a lot of energy during printing and heat the powder around them more. Smaller parts with thin walls have less thermal mass and could be nested closer together without issues. The idea is illustrated in Figure 7, large solid blocks a 0.5mm spacing fuse together but thin-walled shells do not.

A general recommendation for minimum model spacing is given below, however as discussed, some parts could be nested closer than this while others may require more space. When using nesting software like Magics, the minimum model spacing needs to be calculated after the parts are scaled, this is not required in GrabCAD Print Pro.

Safe minimum model spacing	1.5mm

Figure 7

Mechanical Properties - Orientation

Strength is almost perfectly isotropic, and it is only EaB which reduces as the dogbone approaches 90˚ (vertical).

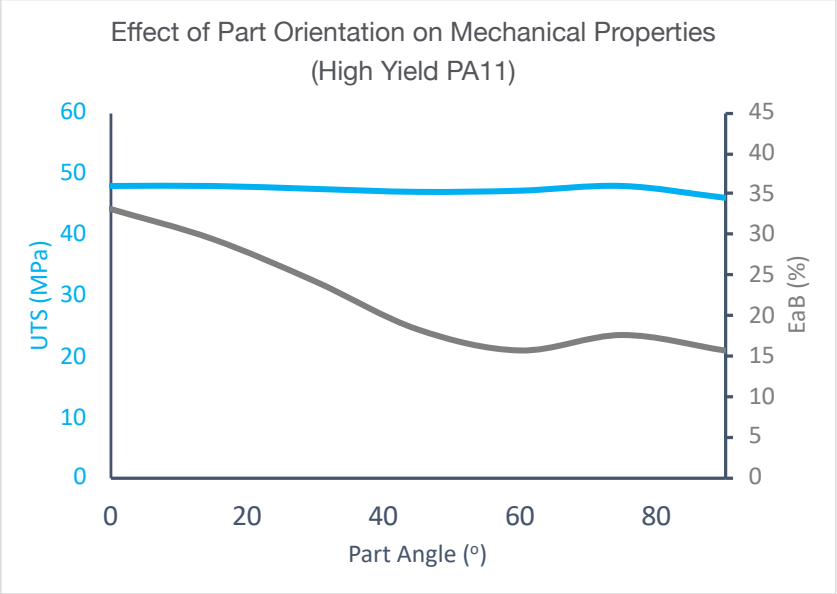

Figure 8

Aesthetics – Orientation

Downfacing material will appear smoother with less visible or defined layer lines.The best geometry to illustrate this is a sphere, as pictured in Figure 9.

Figure 9

Surfaces where the aesthetics are critical should be faced downwards in the build for the best results.
If the part geometry does not allow for all critical surfaces to be faced downwards (opposing faces need to have good aesthetics), then making the faces side facing is a good compromise. An example of this is the handle part below, the A surfaces are all around its circumference so it should be oriented vertically for a uniform finish.

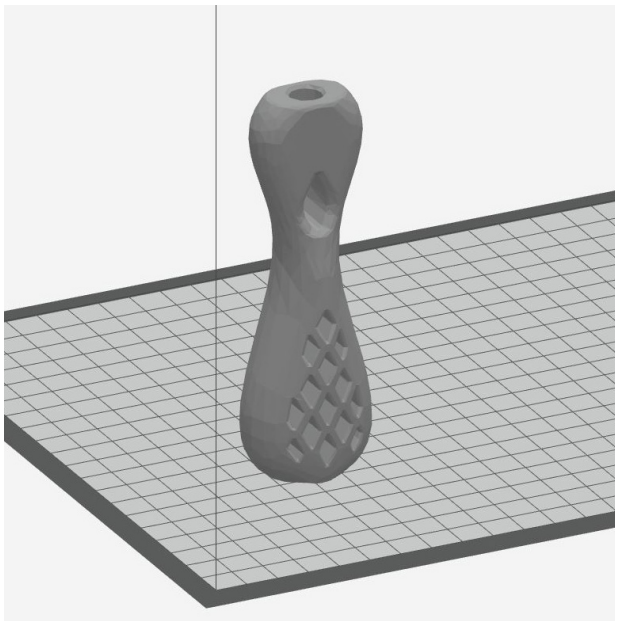

Figure 10

Flat surfaces positioned at shallow angles often have aesthetic issues due to layer lines. To minimize these, the surface can either be faced downwards or it can be rotated to a greater angle from horizontal, this will increase the number of layer lines on the surface and provide a more uniform appearance.

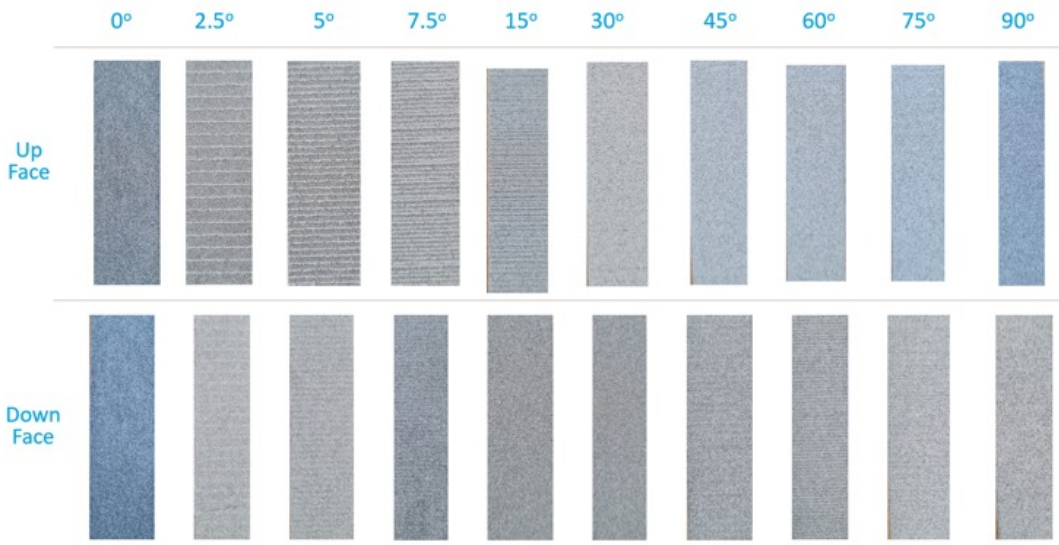

Minimum angle for good aesthetics (>0˚)	20˚

Figure 11

Depowdering Features

Removing all powder from parts is critical to creating an end use part. The ease of depowdering of some features is influenced by their orientation in the build.

Within each slice of the build, enclosed regions of powder have more heat trapped in them, which make the powder harder to remove after the build. Orienting feature like holes away from vertical allows for more heat to escape during printing, making the powder softer and easier to remove.

Depowdering is also improved by allowing air/tools/blast media to pass through a feature. Through features depowder more easily and completely than blind ones. Some guideline hole depths are given in Figure 12.

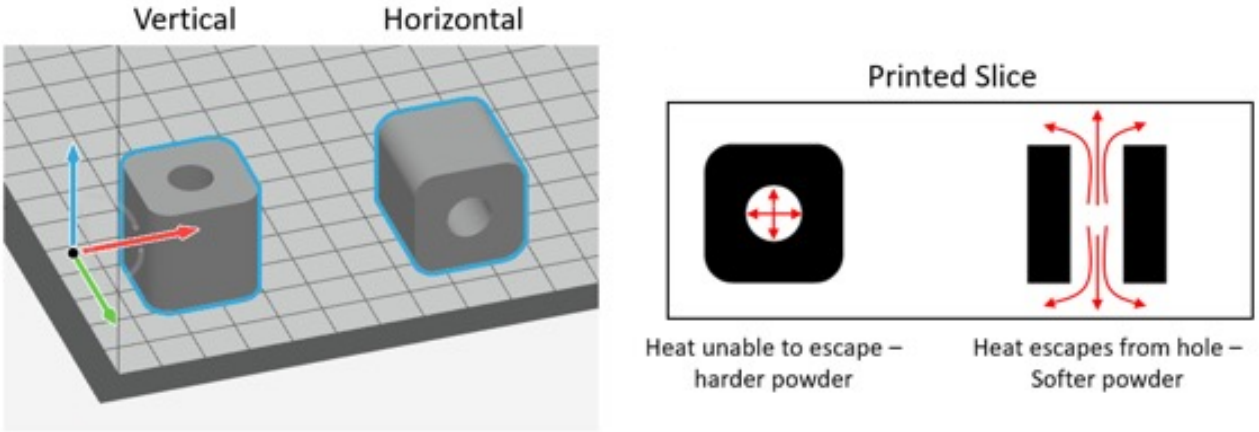

Figure 12

As well as the orientation of a part, its design can be modified to make depowdering quicker and easier. Sharp internal corners are difficult to depowder and often trap powder. This can be avoided by applying a radius to any internal edge as pictured in Figure 14.

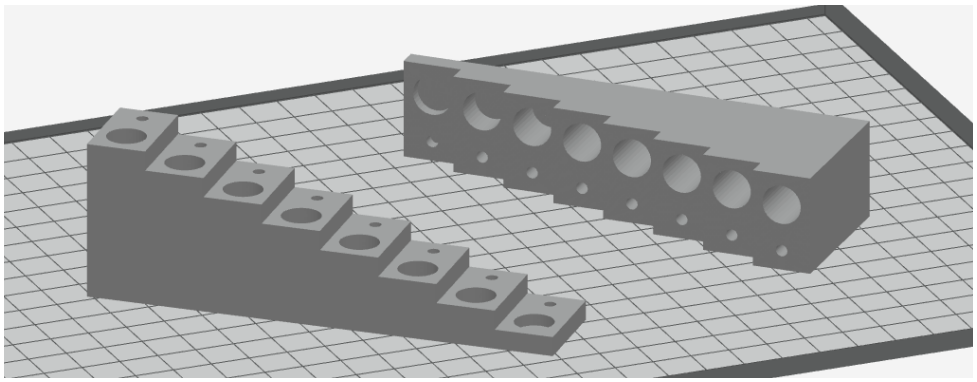

Hole Diameter	10mm		3mm	
Hole Type	Blind	Through	Blind	Through
Horizontal	30mm	Max (40mm)	10mm	20mm
Vertical	25mm	Max (40mm)	5mm	10mm

Figure 13 - Depowderability of features after one cycle through a Dyemansion Powershot C

Sharp, internal corners hold onto powder

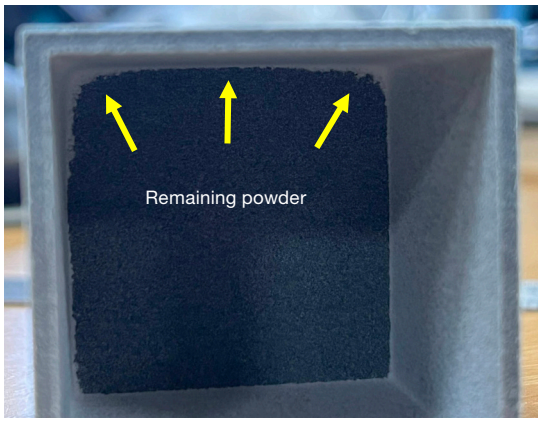

With a radius applied, powder is easily removed

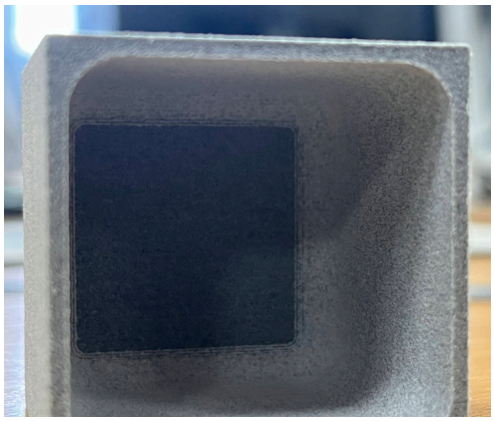

Figure 14

Clearances and Fits

When printing a shaft in place, the challenge is removing the powder from the interface. As with depowdering holes, performance is improved by rotating the interface away from vertical, this is due to the same effect described in the “depowdering features” section.

The clearance required to print a shaft in a hole depends on the surface area of the interface (diameter of shaft, length of interface, etc.). To reduce this interface, the geometry of the shaft (or hole) can be changed. In the example below, Figure 15, a spline is added.

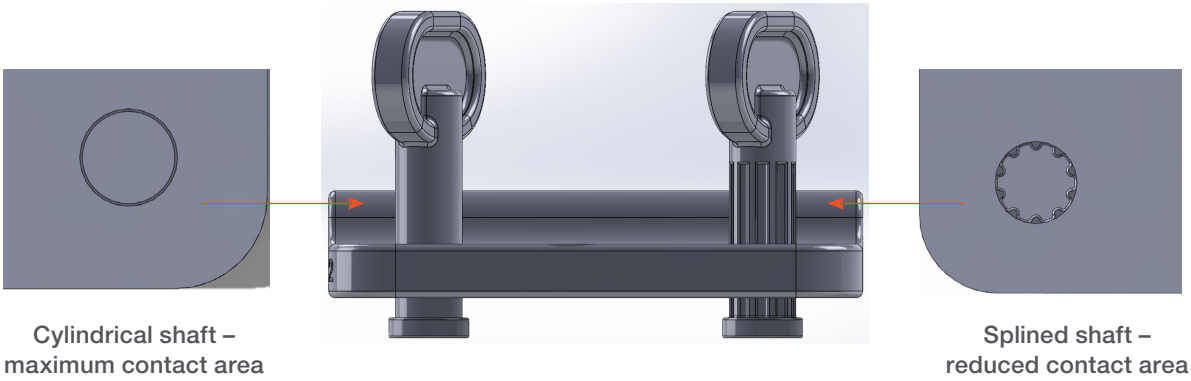

Figure 15

An example test geometry is shown below. It features smooth and splined 5mm shafts through 16 and 8mm holes with 5.3 and 5.2mm holes respectively. Results are given in Table 1 to illustrate how well each fit works. This is only a guide and results will vary depending on the specific design.

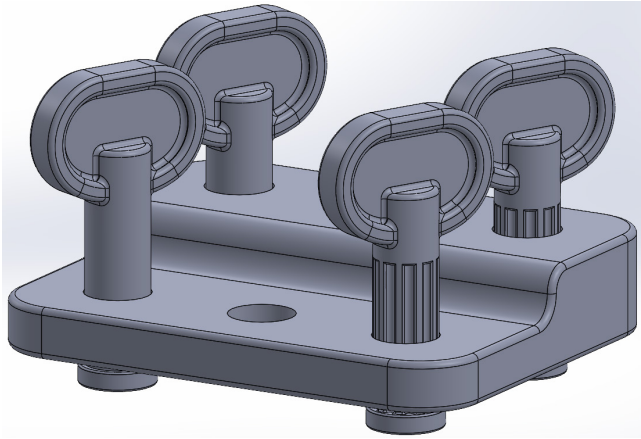

Figure 16

	Shaft Type	
Part Thickness	Smooth Shaft	Splined Shaft
8mm	Free moving	Free moving
16mm	Fused	Free moving

Table 1

Printing Parts to Assemble After Printing

If the parts of an assembly are printed to be assembled after printing, then much closer fits are possible as powder removal is not an issue. Clearances as low as 0.05mm are possible. Position in the build volume is not critical however interfacing features should be built in the same orientation to ensure the best fit.

Labels and Text

Labels and text can be printed with good resolution using the H350, however consideration needs to be made to border offset. Text is considered a fine feature, so it needs to be greater than the minimum feature size previously discussed. This minimum feature size applies to the smallest element of the text, not the overall size, Figure 17.

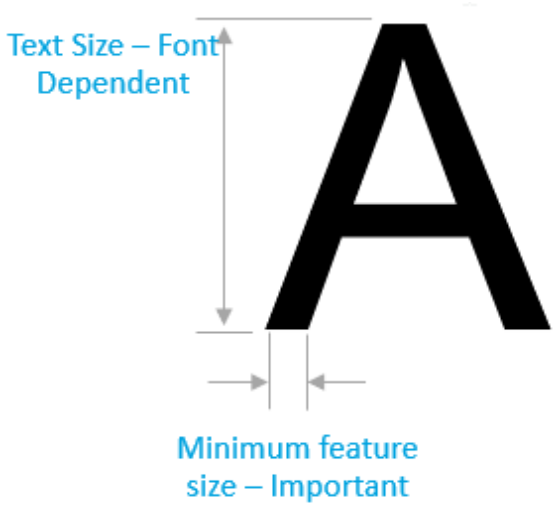

Figure 17

Example minimum text size	Arial: Size 14

Embossed or Debossed

Both embossed (extruded from the part) and debossed (cut into the part) are possible, however better resolution and smaller text is possible with debossed text. Debossed text is a negative feature in a printed area whereas embossed is a positive feature in blank space. The result is that when the border offset is applied to debossed text the letters are enlarged, whereas embossed letters lose pixels and become smaller or are deleted.

Border offset is only applied in the XY plane, so generally text will look best when printed on a side facing surface, Figure 18.

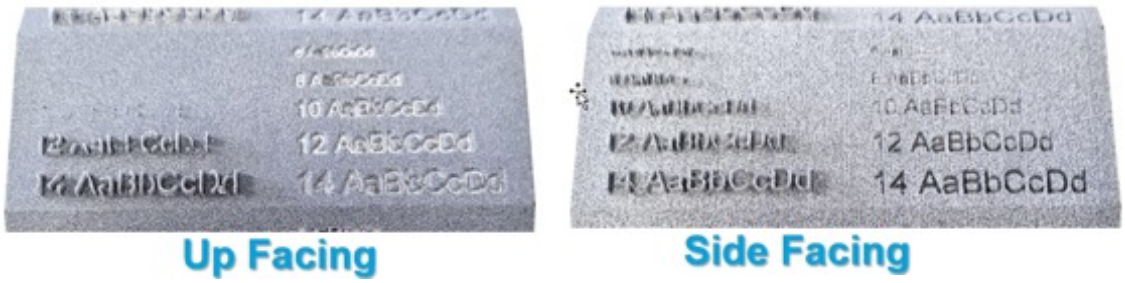

Figure 18

Pixel Stepping

When slicing, CAD models are converted from continuous digital space to discrete pixels. At some point, a decision has to be made whether a pixel should be filled or not. Although uncommon, this can lead to an issue known as pixel stepping, where single pixel height lines appear on side walls of parts, often forming random, sharp edges patterns, shown in Figure 19.

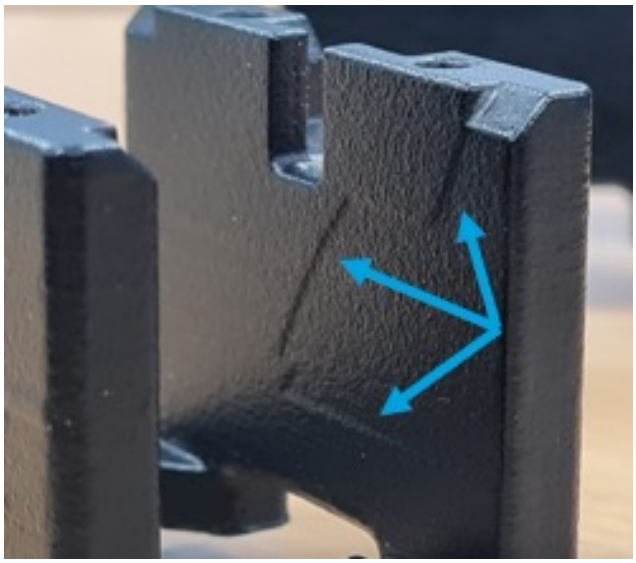

Figure 19

Different slicing software will produce slightly different results due to differences in the way numbers are rounded and handled. Using GrabCAD Print Pro, pixel stepping is a rare issue, however if it occurs on a part then the best solution is to rotate the flat model faces away from the X, Y and Z planes, Figure 20.

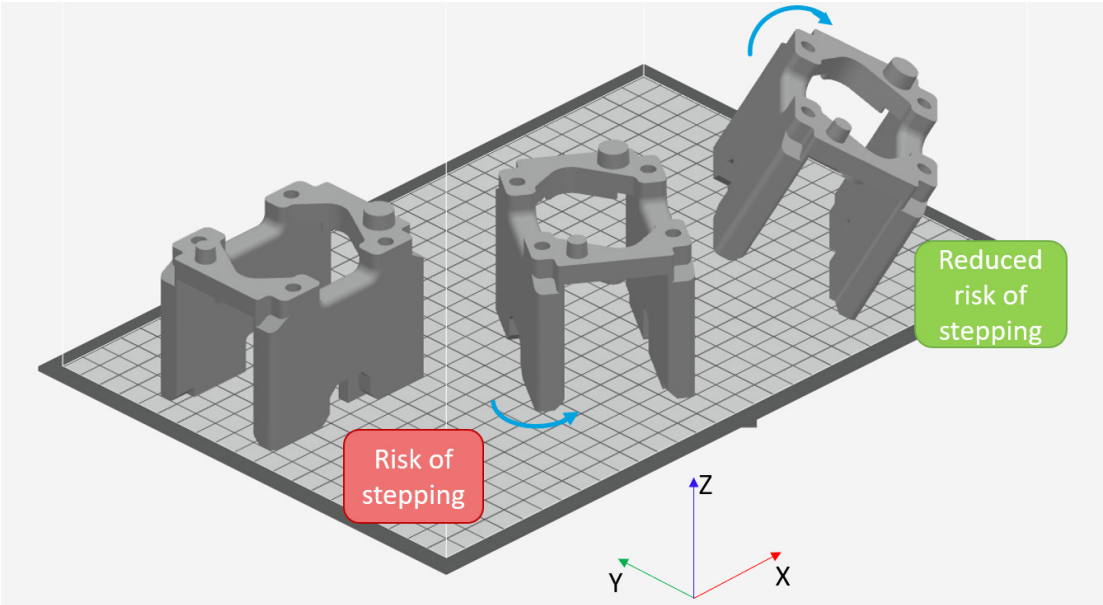

Figure 20

Design for SAF

More Complex, More Efficient

The support-free nature of SAF enables a greater level of geometric freedom when designing parts. This requires a shift in perspective from conventional, and even other additive manufacturing. With SAF it is possible to increase the complexity of the parts while at the same time reducing the cost.

Honeycombing or latticing parts, as well as topology optimization and other advanced techniques bring no additional requirements for supports or fixturing and only serve to reduce material usage. A simple example is shown in Figure 21 where two functionally identical drill guides are produced. Where the lattice is applied, the material usage is reduced by 35%.

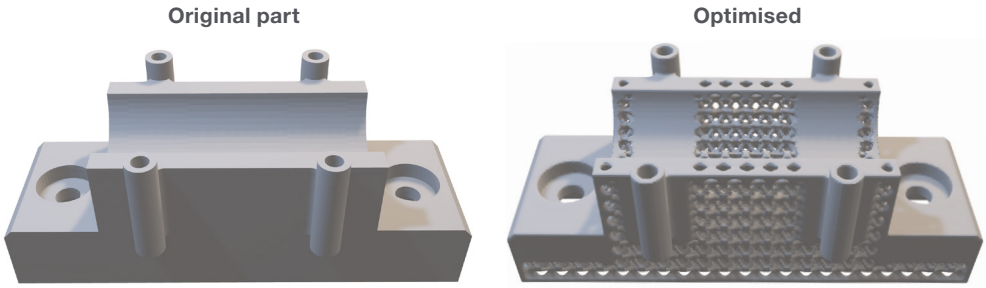

Figure 21

Do you need to remove powder?

With more complex geometries, lattices or hollow parts, powder removal can become difficult. Removing powder and reusing it is the most cost-effective approach, however not essential to achieve a cost reduction. There is a difference in density between loose powder and fused material, Table 2. This means that even if powder is left trapped in a part, there is still a cost saving. If leaving powder trapped in a part, it is best to fully enclose it to prevent powder coming loose during service.

	Density (g/cm³)
Fused material	1.02
Powder	0.40

Table 2

Powder Removal

It is generally recommended that the geometry be left open somewhere to facilitate powder removal. It is however possible to not do this and still save on material.

As loose powder is less dense than printed material and required no HAF to be used, you can still reduce part cost even if the powder is left trapped, although the savings, cost and weight, will be lower.

Threads and Inserts

The resolution of SAF enables fine features such as threads to be directly printed into the part. These threads will not be suitable for load bearing, engineering applications, however, for light duty uses, such as holding covers in place, they may be suitable and save a post processing step. When printing threads, the hole can be either horizontal or vertical, however cylindricity will be slightly improved by printing vertically.

Since the material produced by SAF is 100% dense and fused, it would also be possible to tap threads into a blank hole, however this has few benefits over directly printing the threads as the improved accuracy is unlikely to be necessary in a light duty application. For functional threads, the recommended technique is to print a blank hole and use a threaded insert. SAF materials are all compatible with heat-set inserts. Follow the insert manufacturer's guidelines on hole sizes and torque specs.

Figure 22

Texturing

Texturing is a technique applied in many manufacturing techniques to distract the eye, break up patterns and hide minor defects. The same can be applied in SAF, usually with the goal of disguising layer lines.

Textures can be applied to CAD models using a variety of software. The resolution of the H350 allows for detailed textures to be printed, however the minimum feature size and application of border offset needs to be considered carefully.

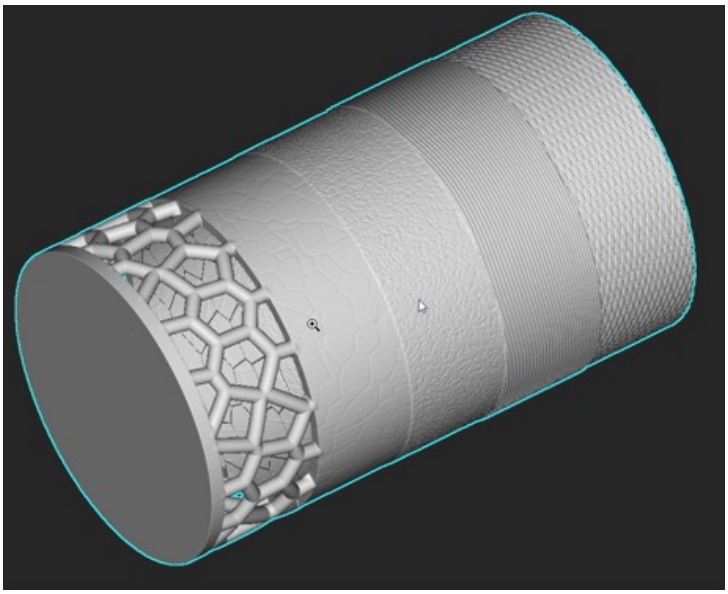

Figure 23

Design for Part Properties

Although small tweaking up or down is possible with bed temperatures, the mechanical properties of the material produced by SAF can be considered fixed. This does not however mean that the properties of printed parts are fixed.

Below is the simple equation for the stress experienced by a part. Two of these variables are fixed. The stress is limited by what the material can withstand (the data sheet value for yield or tensile strength), if this is exceeded, the part will fail. The force is determined by the application requirements. The final variable, the area of material bearing the load, is open to design change. The equation states that, as area increases, the stress experienced by that material reduces. This means that, even though the strength of the material is fixed, it can withstand greater forces simply by increasing the area of material (making the part thicker).

This is fixed. The material determines this

$$Stress = \frac{Force}{Area}$$

This is set by the application

This is design dependent. We have full control

There are many more engineering design principles to consider. For example, second moment of area. This is a measure of the resistance of a geometry to bending when a force is applied. Understanding this can enable improvements of design and material usage. Below is a very simple example is shown where a solid square bar is compared to a hollow one. The outer dimensions of the hollow bar are slightly larger, but the volume would be 62% lower than solid and the stiffness is equal (slightly higher). This is a huge reduction in weight, cost, and material usage. Refer to “More Complex, More Efficient” for more details.

	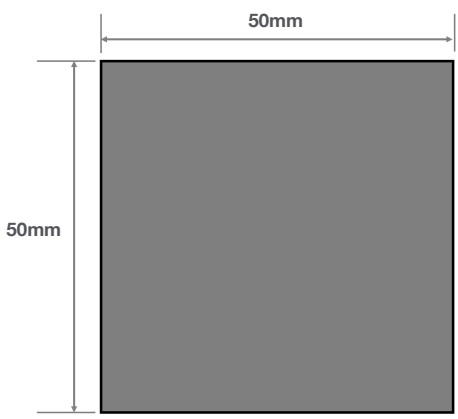	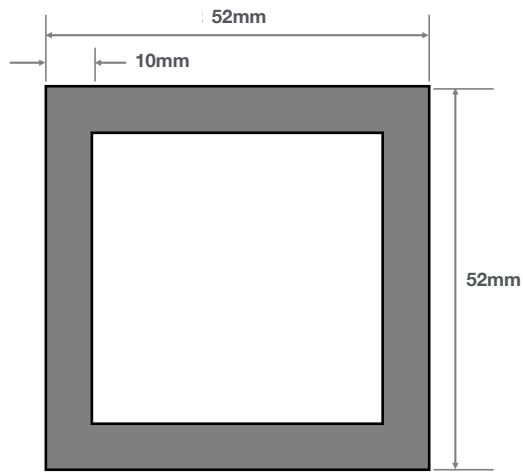
Area (mm^2)	2500	940
Area Reduction	-	62%
Second Moment of Area (mm^4)	~520,000	~520,000

Table 3

Using the logic above, the properties of parts can be tuned to the specific applications. Making these modifications can enable new applications where all the benefits of SAF can be realised. An example is given below, Figure 24, where the existing design of an angled bracket was not stiff enough. The stiffness of the part was increased by enlarging the strengthening ribs, enabling the application to work in SAF.

Original Design – Too Flexible

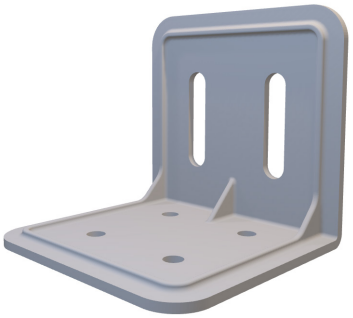

Modified Design – Increased Stiffness

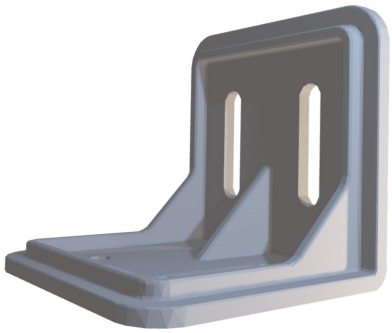

Figure 24

Design for Nesting

The more parts that can be fit into the H350 build volume, the more productive the machine can be, and the lower the part cost. Especially when targeting higher volumes of parts, marginal improvements in nesting efficiency can yield significant savings.

When designing a part for SAF, thought should be given to nesting the parts. An example of a puck to hold a component on a conveyer belt is shown below in Figure 25. The initial design has a square base and can pack 75 parts into the volume.

Without changing the functionality of the parts, leaving the mounting slots untouched, the design has been modified to improve nesting. As shown in Figure 26 this improves the nesting and allows an additional 45 parts to fit in. Over a volume production run, this significantly improves costs.

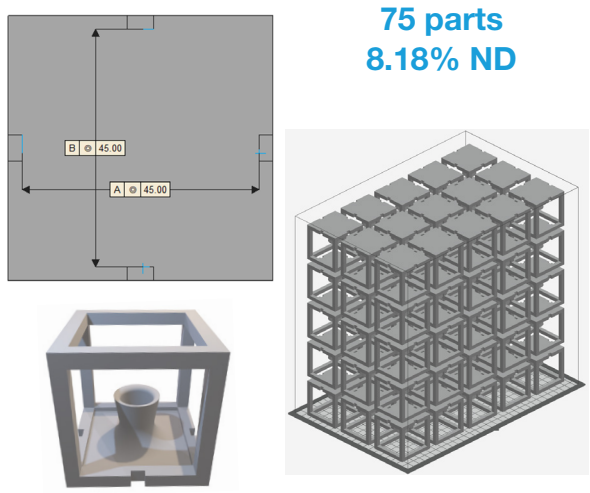

Figure 25

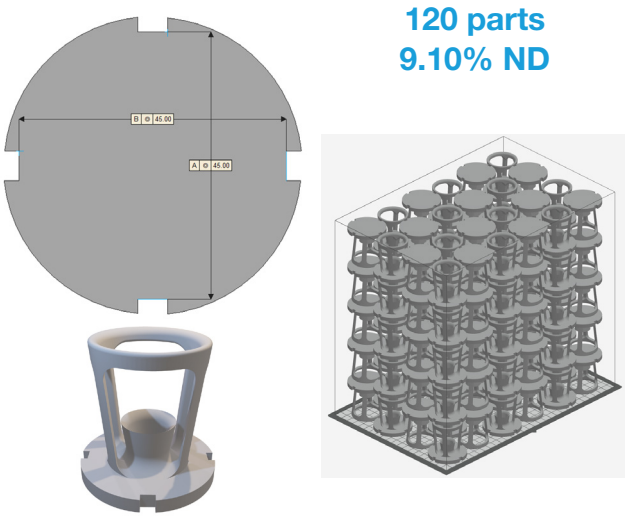

Figure 26

Small Part Management

SAF technology is very effective at producing large numbers of smaller parts. There are a few design and nesting decisions which can be made to manage these parts more effectively. These could be used to prevent small parts from being lost during depowdering or to group together associated parts to speed up retrieval after depowdering.

Sinter cages are thin, sacrificial geometries built to contain a selection of parts, Figure 27. The holes in the cage allow the entire cage to be depowdered and bead blasted in situ, with the thin cage broken open at the end to recover the parts.

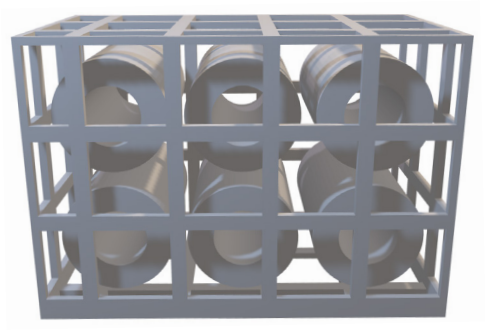

Figure 27

Another option to manage groups of associated parts is to create a sprue. This is another sacrificial geometry, this time providing better access to the parts for depowdering, Figure 28. The attachment points between the sprue and the parts needs to be carefully selected. When removed, the sprue may leave a mark on the part, this is best placed on a non functional/aesthetic surface.

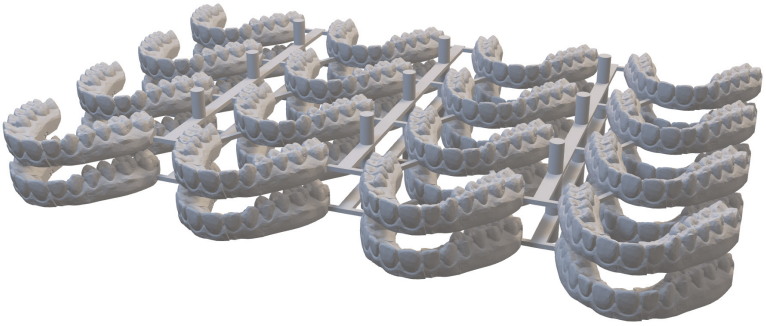

Figure 28

Stratasys Headquarters

7665 Commerce Way,
Eden Prairie, MN 55344
+1 800 801 6491 (US Toll Free)
+1 952 937-3000 (Intl)
+1 952 937-0070 (Fax)

1 Holtzman St., Science Park,
PO Box 2496
Rehovot 76124, Israel
+972 74 745 4000
+972 74 745 5000 (Fax)

stratasys.com
ISO 9001:2008 Certified

© 2023 Stratasys. All rights reserved. Stratasys, the Stratasys Signet logo, Stratasys Direct Manufacturing, H350, H Series, SAF, Selective Absorption Fusion, Big Wave and HAF are trademarks or registered trademarks of Stratasys Inc. and/or its affiliates. The H350 printer is subject to a license from Loughborough University Enterprises Limited and Evonik IP GmbH under the following and/or related patents and patent applications and their family members: EP2739457, EP3539752, EP1648686, EP 1740367, EP1737646, EP1459871. Further details including live and in-force status of family members may be found at https://worldwide.espacenet.com/patent/search/family/. All other trademarks are the property of their respective owners, and Stratasys assumes no responsibility with regard to the selection, performance, or use of these non Stratasys products. Product specifications subject to change without notice.
DG_SAF_DesignGuide_0523a